International Engineering Research Journal

# Numerical Analysis of Thermocline Thermal Energy Storage Tank

**Mohit M. Taware[1], Dr. Narendra R. Deore[2] , Dr. Anindita Roy[3]**

[1]Department of Mechanical Engineering, PimpriChinchwad College of Engineering, SPPU, Pune, Maharashtra 411033, India
[2]Department of Mechanical Engineering, PimpriChinchwad College of Engineering, SPPU, Pune, Maharashtra 411033, India
[3]Department of Mechanical Engineering, PimpriChinchwad College of Engineering, SPPU, Pune, Maharashtra 411033, India

***Abstract***

*Thermal energy storage systems are helpful to provide solutions when there is a gap between thermal energy supply and energy demand. Thermocline thermal energy storage tank is an efficient and cost-competitive alternative to the traditional two-tank design. Here, water is used as a heat transfer fluid. The performance of a thermocline storage tank is affected by several factors like its thermal capacity, temperature range over which it operates, temperature stratification in the device, means of addition or removal of heat and temperature differences associates thereafter, thermal losses from the device, etc. This paper represents the numerical study of thermocline thermal energy storage tank, which is vertically placed and initially filled with cold water at temperature 300 K and with different inlet velocities of hot water at different temperature. The three dimensional analysis is carried out under transient flow modelling for vertical cylindrical tank having 1500 mm height and 500 mm diameter i.e. aspect ratio is 3. Also, we investigate the nature of thermocline layer for storing condition as well as for charging process of storage tank. The results shows that the increase in inlet velocity of hot water disturb the thermocline layer in less time and hence decay of thermal stratification will occur. Finally, the results are validated with available literature.*

***Keywords:****Thermal stratification, Hot water storage tank, Numerical simulation, Transient flow analysis.*

## 1. Introduction

Most of the solar energy based applications does notgive continuous and effective performance due to intermittent nature of solar radiations. This limitation of solar energy is minimizes by thermal energy storage (TES) system which is the missing link to sustain and reliable power generation via solar thermal energy. There are three types of thermal energy storage systems: Latent heat storage, sensible heat storage and chemical heat storage, in which, sensible heat storage is widely used in TES applications. The thermal energy storage using latent heat or sensible heat is most successfully achieved with the help of tanks as a storage medium. The most effective method when tanks are used as a storage medium is the thermocline TES. Also, single tank and two tank systems are used, but due to mixing of hot and cold fluids in single tank and inefficient double tankage volume for same amount of water in two tank thermal energy storage system causes inefficient increasing cost & complexity of storage systems and also reduce the overall efficiency of system.

A thermocline system is the best solution to overcome these problems and also gives the maximum output from the same unit. It consist of cylindrical tank in which residential cold fluid and incoming hot fluid have minimum mixing and a thermocline layer is formed (due to density difference between hot and cold fluids, that is buoyancy effect) which act as a barrier during the entire charging and dis-charging process. The major challenges in this thermocline tank is to reduce thermal stratification during charging and dis-charging process.

The experimental set-up of thermocline tank is developed in which hot water is incoming from top side of the tank at $T_h = 60\ o_C$ and cold fluid is make up from bottom of the tank at $T_c = 27\ o_C$ .(Ramesh S. Vishwakarma, *et al*, 2016).Also an analytical model is designed including energy balance model and validated with experimental results. This experiment is carried out under different operating conditions such as, static mode at different percentage of charging, simultaneous charging and discharging behaviour on thermocline at different percentage of charging, effect of thermocline during dynamic mode, etc. Also they shows that the thermocline storage tank has 10-15 % higher thermal storage efficiency compared to mixed storage tank for the same load profile. They also suggested new inlet and outlet design for charging and dis-charging process, as well as, perforated diffuser plate design for minimum mixing of hot and cold fluids. Numerical simulation of 3-dimensional flow dynamics in a hot water storage tank is done by(Simon Levers, et al, 2009), they carried out different simulations for variable aspect ratios, mass flow rates of incoming and out-going fluids, etc. They also found an effect of inlet and outlet pipe positions on thermal stratification. The result shows that as aspect ratio increases, thermal stratification inside the tank would be batter. For minimize the mixing inside the tank, inlet and outlet mass flow rates should be as small as possible. Next, the CFD simulation is carried out for thermal stratification in heat storage for CHP plant by (Giedre Streckiene, et al,2009), represents the study of effect of density and specific heat as a function temperature. Here, two dimensional transient model is used for numerical simulation. Boussinesq approximation is referred for water density.

Numerical analysis for transient mixed convection flow inside the tank showing major effect of aspect ratios and fluid properties is studied by (A. Bouhdjar, et al,

2002).Three different HTF are used as a working fluids inside the tank i.e. ethylene glycol, torada oil, and water. The governing equations are used for laminar flow and Boussinesq approximation is adapted for fluid density in natural convection. Also in this paper, the Prandtl number based correlations are derived for calculating storage efficiency. For dynamic mode of thermocline tank, the 3D numerical simulations are carried out for both horizontal and vertical storage tank. (Olfa Abdelhak, et al, 2015). Different performance parameters such as, Richardson number, discharge efficiency, and stratification number were studied under variable operating conditions. Thermal gradient present along height of the vertical storage tank plays an important role in enhancing overall efficiency of storage system. The governing equations are solved for unsteady, turbulent flow having Re = 4595. For that,k-εturbulent model is used with full buoyancy effect. The result shows that the stratification efficiency is lower in horizontal tank compared to vertical tank. (A Chan, et al, 1993), carried work on numerical study for storage tank operating on mixed convection flow, represents 2D transient model with laminar flow considering Boussinesq approximation. The maximum efficiency is obtained when inlet flow is from the top side and outflow from the bottom of the tank. The presence of dead zone at the bottom of the tank reduces storage efficiency. Again an important factor is introduced for showing the water mixing inside the tank. This factor is called as an entrainment factor. Higher mixing of hot and cold fluids is occurs due to higher entrainment factor which is because of higher inlet velocity. So, for getting better thermal stratification inside the tank, lower inlet velocity is always preferred. (Wenfeng Gao, et al,2007).

## 2. Methodology

*2.1 Physical model :*

The thermocline thermal energy storage tank used for CFD analysis in this study is basically vertically placed and cylindrical in shape with height H = 1500 mm and diameter D = 500 mm i. e. aspect ratio (H/D) is 3. The thickness of tank wall is about 1.6 mm. A three-dimensional geometry is created in ANSYS FLUENT as shown in figure 1. And further operations are also done on same software. An upper part of the tank is considered as inlet and bottom as outlet. Initially tank is filled with the cold water at $T_c$=3oo K.

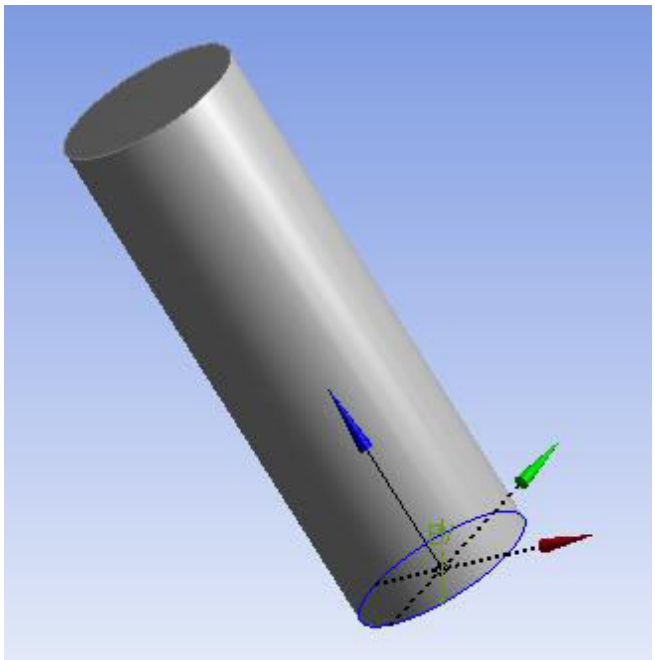

**Fig.1**Computational domain : Physical model of thermocline storage tank

*2.2 Grid generation :*

The mesh sizing is done by fine hex-mesh with high smoothing for getting uniform nature of the mesh elements shown in figure 2. The mesh consists of number of nodes = 51200 and number of elements = 48258. As we know, in grid generation technique, low orthogonal quality or high skewness values are not recommended. Therefore, skewness and orthogonal quality is checked for proper grid generation and it is very well accepted.

*2.3 Governing equations :*

The 3D flow dynamics in storage tank is described by the following governing equations, in which continuity equation (1) and Navier-Stokes equations (2,3,4)gives detailed mathematical description of the velocity and pressure fields. The continuity equation is given as below,

$$\frac{\partial \rho}{\partial t} + \frac{\partial(\rho u)}{\partial X} + \frac{\partial(\rho v)}{\partial y} + \frac{\partial(\rho w)}{\partial z} = 0 \ldots (1)$$

And the Navier-Stokes equations are written as,

$$\frac{\partial(\rho u)}{\partial t} + \frac{\partial(\rho u u)}{\partial X} + \frac{\partial(\rho u v)}{\partial y} + \frac{\partial(\rho u w)}{\partial z} = \frac{\partial}{\partial x}\left(\mu \frac{\partial u}{\partial x}\right) + \frac{\partial}{\partial y}\left(\mu \frac{\partial u}{\partial y}\right) + \frac{\partial}{\partial z}\left(\mu \frac{\partial u}{\partial z}\right) - \frac{\partial p}{\partial x} + S_u \ldots (2)$$

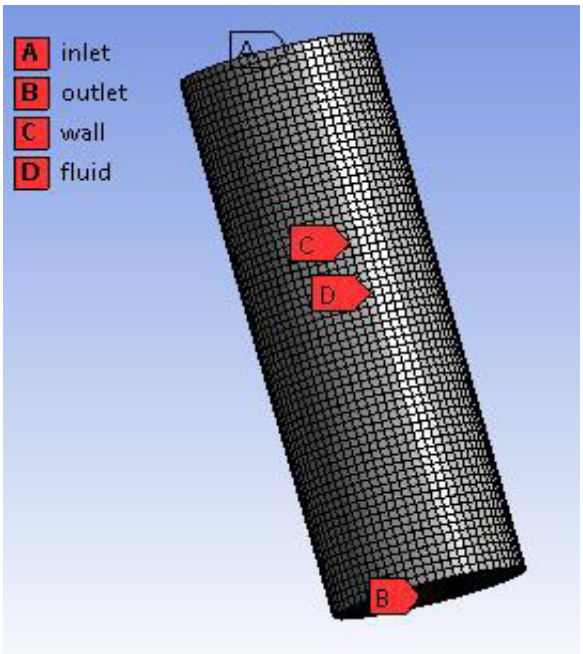


**Fig.2**Meshing of computational domain

$$\frac{\partial(\rho v)}{\partial t}+\frac{\partial(\rho vu)}{\partial X}+\frac{\partial(\rho vv)}{\partial y}+\frac{\partial(\rho vw)}{\partial z}=\frac{\partial}{\partial x}\left(\mu\frac{\partial v}{\partial x}\right)+\frac{\partial}{\partial y}\left(\mu\frac{\partial v}{\partial y}\right)+\frac{\partial}{\partial z}\left(\mu\frac{\partial v}{\partial z}\right)-\frac{\partial p}{\partial y}+S_v \ldots(3)$$

$$\frac{\partial(\rho w)}{\partial t}+\frac{\partial(\rho wu)}{\partial X}+\frac{\partial(\rho wv)}{\partial y}+\frac{\partial(\rho ww)}{\partial z}=\frac{\partial}{\partial x}\left(\mu\frac{\partial w}{\partial x}\right)+\frac{\partial}{\partial y}\left(\mu\frac{\partial w}{\partial y}\right)+\frac{\partial}{\partial z}\left(\mu\frac{\partial w}{\partial z}\right)-\frac{\partial p}{\partial z}+S_w \ldots(4)$$

Where, u, v, w, are the velocity components in x, y and z direction respectively, and P is the pressure, μis the viscosity, and ρis the density of the fluid, and $S_u$, $S_v$, $S_w$are the source terms in x, y and z direction, respectively.And energy equation (5) describes the heat transfer analysis, which is given by,

$$\frac{\partial(\rho T)}{\partial t}+\frac{\partial(\rho uT)}{\partial X}+\frac{\partial(\rho vT)}{\partial y}+\frac{\partial(\rho wT)}{\partial z}=\frac{\partial}{\partial x}\left(\frac{k}{C_p}\frac{\partial T}{\partial x}\right)+\frac{\partial}{\partial y}\left(\frac{k}{C_p}\frac{\partial T}{\partial y}\right)+\frac{\partial}{\partial z}\left(\frac{k}{C_p}\frac{\partial T}{\partial z}\right)+S_T \ldots(5)$$

Where, T is the temperature in kelvin, ρ is the density in Kg/$m^3$, k is thermal diffusivity in $m^2$/s, ν is the kinematic viscosity in $m^2$/s, $C_p$is specific heat of fluid in J/Kg-K and $S_T$is the source term.

*2.4 Numerical analysis :*

Numerical simulation is carried out in ANSYS FLUENT 13.0 software. The first step for numerical simulation is to define the type of solver and suitable models according to given operating conditions. Fluid flowing through inside the tank is considered as laminar flow for low velocities. For transient buoyancy driven flows, the accurate choice is a pressure-based solver with energy equation kept ON. Here, gravity plays a very crucial role in heat transfer between hot and cold fluid for vertical storage tank. So, we set the gravity g= - 9.81 m/$s^2$ in z-direction. As the main focus on the transient simulation, time is set to be unsteady. Next, define the operating density ρ= 998.2Kg/$m^3$ and operating pressure P = 101325 Pa. For lower Reynolds number, select the viscous laminar model. All solver parameters are mentioned in table 1. In materials panel, we define the liquid-water as a HTF with Bousinesq approximation. The fluid properties are given in table 2. Steel is used for tank material.

**Table 1**Solver Controls

| | |
|---|---|
| Space | 3D |
| Solver | Pressure Based |
| Time | Unsteady, 2nd order Implicit |
| Energy equation | ON |
| Model | Viscous-Laminar |

**Table 2**Water Properties at T = 316 K

| | |
|---|---|
| Density, ρ (Boussinesq) in kg/$m^3$ | 998.2 |
| Thermal Conductivity, k (constant) in W/$m^2K$ | 0.7 |
| Specific Heat, $C_p$(constant) in J/$kg.K$ | 4180 |
| Viscosity, μ (constant) in kg/m-s | 0.001003 |
| Thermal Expansion Coefficient, β (constant) in $K^{-1}$ | 0.00021 |

Boundary conditions are mentioned in Table 3. At inlet, three different mass flow rates (50, 100, 150 Kg/hr) of hot water is given at T = 333 K. At outlet, temperature given to be T=300 K with pressure outlet (Gauge pressure = 0) boundary condition. For wall, zero heat flux is the boundary condition given for no heat loss from the tank.

**Table 3**Boundary Conditions

| | |
|---|---|
| Inlet Temperature in K | 333 |
| Inlet Mass Flow Rates in Kg/hr | 50, 100, 150 |
| At outlet | T = 300 K |
| Wall Heat Flux in $W/m^2$ | 0 |

A SIMPLE scheme is choose for solution methods, and in spatial discretization settings, for natural convection problems where gravity is ON,the pressure based discretization is set to Body-Force Weighted. Next, for momentum, turbulent kinetic energy, turbulent dissipation rate, energy equations, we selected Second Order Upwind method which is more suitable for transient condition. Furthermore, an under relaxation factors are set to be, for Pressure = 0.3, Density, Body Forces = 1, Momentum = 0.7, Turbulent Kinetic Energy= 0.8, Turbulent Dissipation Rate = 0.8, Turbulent Viscosity, Energy = 1. Finally, a time step of 1 sec. and total number of time steps are arranged according to results required. A standard initialization is done at T=300 K.

## 3 Results and Discussions

*3.1 Effect of gravity and wall boundary condition on thermal stratification :*

This numerical study is carried out for a vertically placed cylindrical thermal storage tank create separates zones of hot and cold water at top and bottom section of the tank respectively, because of the density difference. The gravity effect is more dominant in vertically downward direction provokes the mixing of hot and cold fluids. The results are obtained for transient flow boundary conditions with considering gravity effect and without considering no-slip wall condition is shown in figure 3 and 4. when we consider the no-slip wall condition for viscous fluids, i.e. it is acts as a solid boundary, the fluid will have zero velocity relative to the boundary. Figure 3 shows that evolution of temperature contours of 3D-model when no-slip boundary condition is OFF and mass flow rate = 50 Kg/hr for time (a) 1 hr, (b) 2 hr, (c) 3 hr, (d) 4 hr, (e) 5 hr, respectively and figure 4 shows the corresponding vertical profiles of the average temperature in the tank for same operating conditions. Here, 50 Kg/hr mass flow rate is set at inlet as well as at outlet with zero shear stress wall boundary condition and we can see here, how thermocline layer is shifted inside the tank from 1 hour to 5 hours. A steepest temperature gradient is observed in thermocline storage tank with variation in total time steps, as shown in figure 4.
Next, when we consider the effect of No-slip wall boundary condition on fluid inside the tank for mass flow rate = 50 Kg/hr and time varies from 1 hour to 5 hour, in figure 5 and 6. We can see that the evolution of boundary layer near the tank wall surface i.e. at location very close to tank wall, the velocity is always zero throughout the simulation and also see the clear picture of penetration of hot water at faster rate in lower time steps inside the storage tank. Here, the parabolic nature of stratified layer is observed and hence the hot water occupies the maximum vertical axial space inside storage tank at faster rate.

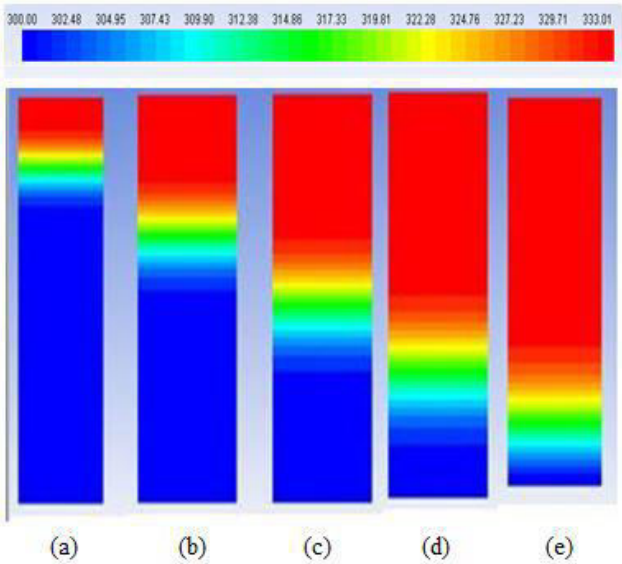


**Fig.3**Evolution of temperature contours of 3D-model when no-slip wall boundary condition is OFF and mass flow rate = 50 Kg/hr for time (a) 1 hr, (b) 2 hr, (c) 3 hr, (d) 4 hr, (e) 5 hr, respectively.

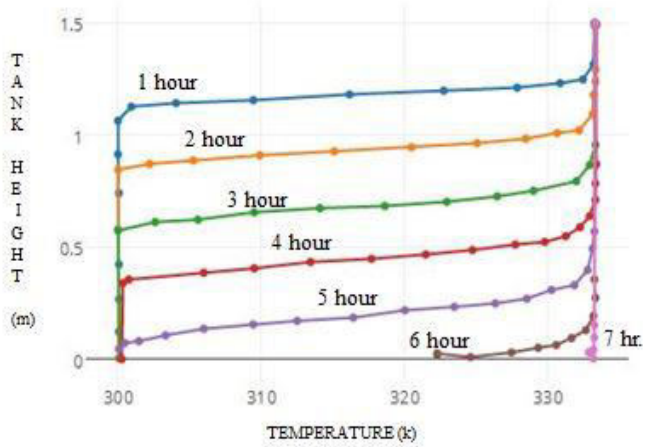


**Fig.4**Evolution of the vertical profiles of the average temperature in the tank when no-slip wall boundary condition is OFF and massFlow rate = 50 Kg/hr from time 1 hour to 7 hour.

*3.2 Effect of inlet velocity on thermal stratification :*

In this section, we can see the effect of inlet velocity on thermal stratification by means of varying inlet and outlet mass flow rates. As we considered here three different mass flow rates i.e. 50 Kg/hr, 100 Kg/hr, and 150 Kg/hr, at inlet and outlet for charging process, the following results are obtained. Due to change in mass flow rate (i.e. velocity of incoming and out-going fluid), there is bigger variation in temperature profiles corresponding to given velocity.

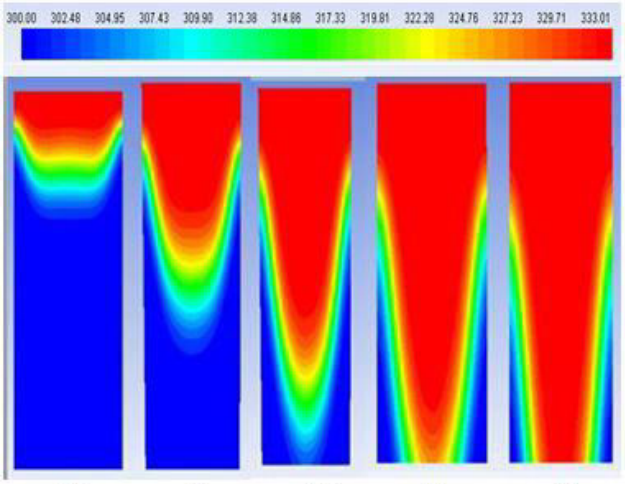


(a) (b) (c) (d) (e)

**Fig.5**Evolution of temperature contours of 3D-model when no-slip wall boundary condition is ON and mass flow rate = 50 Kg/hr for time (a) 1 hr, (b) 2 hr, (c) 3 hr, (d) 4 hr, (e) 5 hr, respectively.

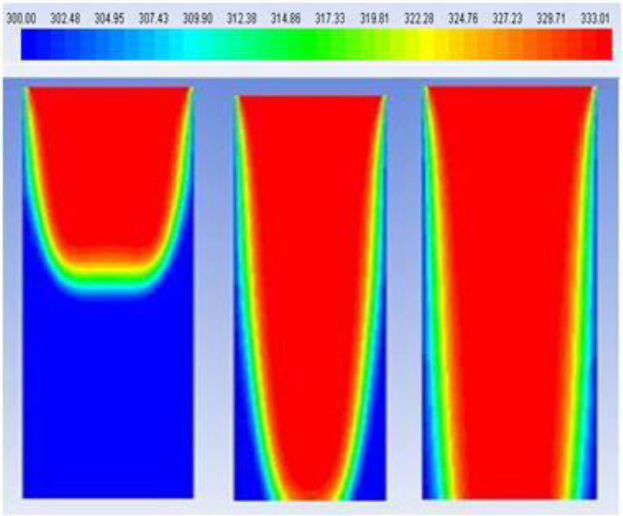


(a) (b) (c)

**Fig.6**Evolution of temperature contours of 3D-model when no-slip wall boundary condition is ON and mass flow rate = 100 Kg/hr for time (a) 1 hr, (b) 2 hr, (c) 3hr, respectively

Figure 5 captures the evolution of temperaturecontours of 3D-model when no-slip wall boundary condition is ON and mass flow rate = 50 Kg/hr for time (a) 1 hr, (b) 2 hr, (c) 3 hr, (d) 4 hr, (e) 5 hr, respectively. Similarly, results are taken at mass flow rate = 100 Kg/hr and 150 Kg/hr for time (a) 1 hr, (b) 2 hr, (c) 3 hr, andshows in figure 6 and figure 7 respectively. From figure 6 and 7, we can conclude that, the rate of decay of thermocline layer is very high as compared to a case in which mass flow rate = 50 Kg/hr. The decay of thermocline is strongly depends on aspect ratio, shape of the tank, velocity of inlet fluid, and properties of HTF, etc.

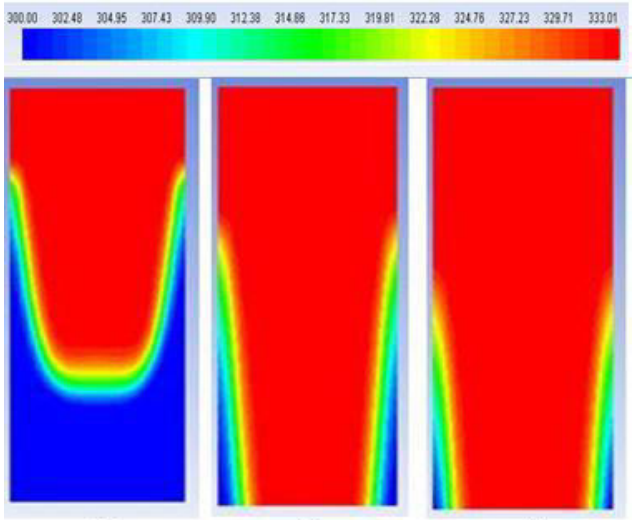


(a) (b) (c)

**Fig.6**Evolution of temperature contours of 3D-model when no-slip wall boundary condition is ON and mass flow rate = 150 Kg/hr for time (a) 1 hr, (b) 2 hr, (c) 3hr, respectively

## 4 Conclusions

In this present study, the flow inside the thermocline tank is studied under different mass flow rates for charging process. Boussinesq approximation is applied for water density. The numerical model can easily capture the thermal stratification effect in cylindrical storage tank. A stable horizontal thermocline layer is obtained when gravity and fully buoyancy effect is activated for given computational domain.

The decay of thermocline is observed in storage tank for different mass flow rates and aspect ratio = 3. When mass flow rate = 50 Kg/hr, after 7 hours there is disturbance in stratification layer, but at mass flow rate = 100 Kg/hr, and 150 Kg/hr, the thermocline decay is observed in 2 hours and 80 minutes respectively. Also, the overall performance is strongly depends on inlet velocity of HTF. We can improve the overall efficiency of thermocline storage tank by changing aspect ratio, using diffuser at inlet section, selecting proper shape of storage tank, etc.

## Acknowledgements

I would like to express my special thanks of gratitude to my guides Dr. Narendra Deore, Dr.AninditaRoy, and our principal Dr. A.M. Fulambarkar who gave me the opportunity to do this project on research oriented topic, which also helped me in doing a lot of researchas well as study and I came to know about different things related to numerical modelling and heat transfer physics in thermocline tank. I am really thankful to my parents who helped me a lot in finalizing this project within the limited time frame as well as my friends who helped me throughout to complete this project.

## References

Ramesh S. Vishwakarma, Dr.Anindita Roy, Dr.DadasahebShendage, (2016), Analytical and Experimental Analysis of Thermocline Thermal Energy Storage Tank, *2nd Mechanical Engineers Post Graduate Students Conference,* June 8-June 9.

Simon Ievers and Wenxian Lin, (2009.), Numerical simulation of three-dimensional flow dynamics in a hot water storage tank, *Applied Energy,* Vol. 86, 260-265.

GiedreStreckiene, VytautasMartinaitis, PetrasVaitiekunas.,( 2011), CFD simulation of thermal stratification in the heat storage for CHP plant,$8^{th}$*International Conference on solar energy*, Vol. 19,519-524.

A. Bouhdjar and A. Harhad, (2002), Numerical analysis of transient mixed convection flow in storage tank: influence of fluid properties and aspect ratios on stratification, *Renewable Energy,* vol. 25, 555-567.

OlfaAbdelhak, Hatem Mhiri, Philippe Bournot, (2015), CFD analysis of thermal stratification in domestic hot water storage tank during dynamic model, *Building Simulation,* vol. 34, 451-457.

M.C.Chan and P. S. Smereka,( 1993),ANumerical Study of Transient Mixed Convection Flows in a Thermal Storage Tank*, solar energy*, Vol. 105, 519-524.

Wenfeng Gao, Tao Liu, Wenxian Lin, Chuanxu Luo, (2007), Numerical Study on Mixing Characteristics of hot Water inside the Storage Tank of a Solar System with Different Inlet Velocities of the Supply ColdWater , *Procedia Environmental Science*, vol. 11, 1153-1163.

K.V. Manu, PrateekAnand, Utpal Kumar Chetia, SaptarshiBasu, (2015), Effects of instabilities and coherent structures on the performance of a thermocline based thermal energy storage *, Applied Thermal Engineering*, vol.87, 768-778.

Mi-Soo Shin, Hey-Suk Kim,Sang-Nam Lee, (2004), Numerical and experimental study on the design of a stratified thermal storage system *, Applied Thermal Engineering*, vol.24 , 17-27.

Bergman T., Lavine A.,IncroperaD.,DeWitt D., (2010)Fundamentals of heat and mass transfer", Wiley-7th edition.